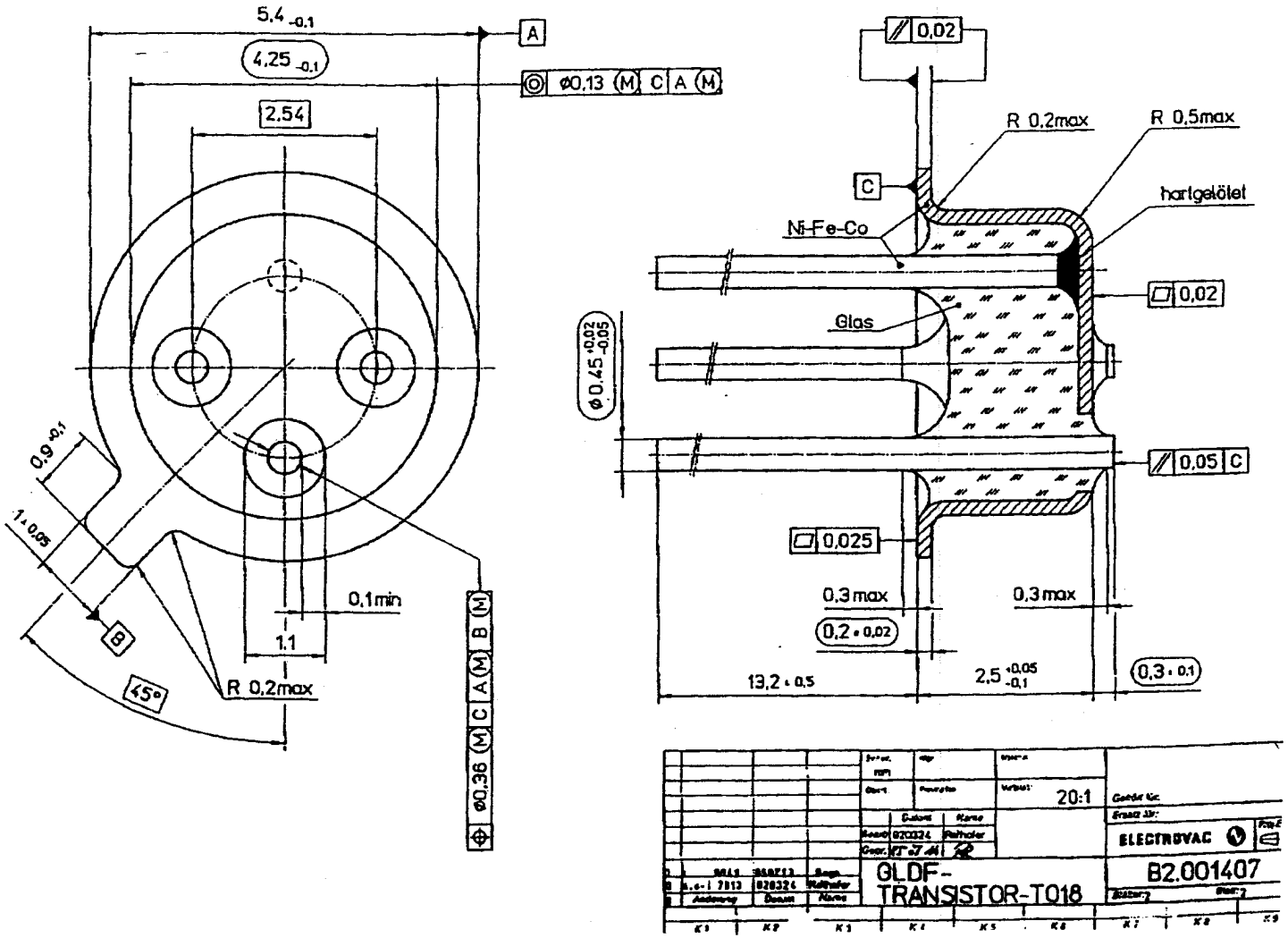**SSM P/N HDR01833**