SSM P/N CSB00818

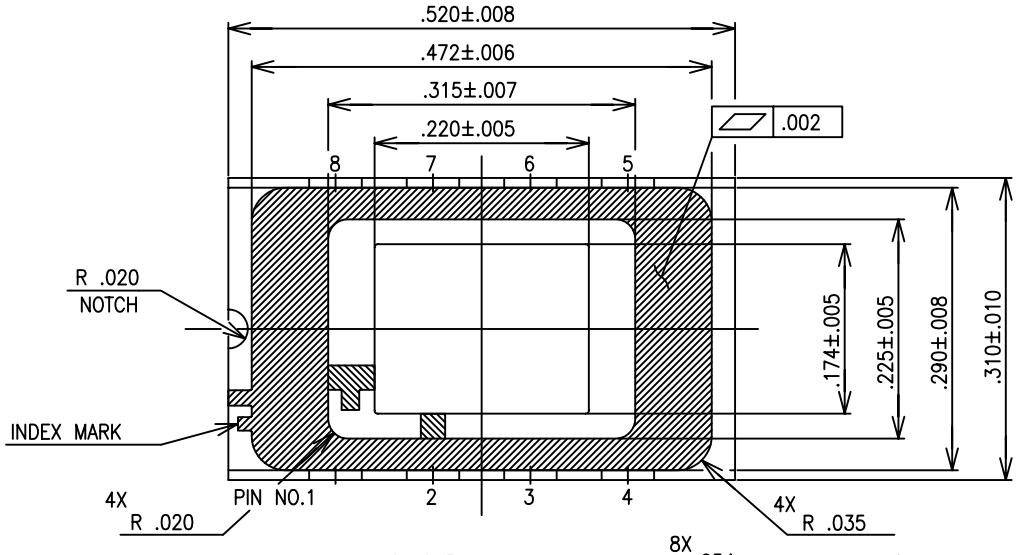

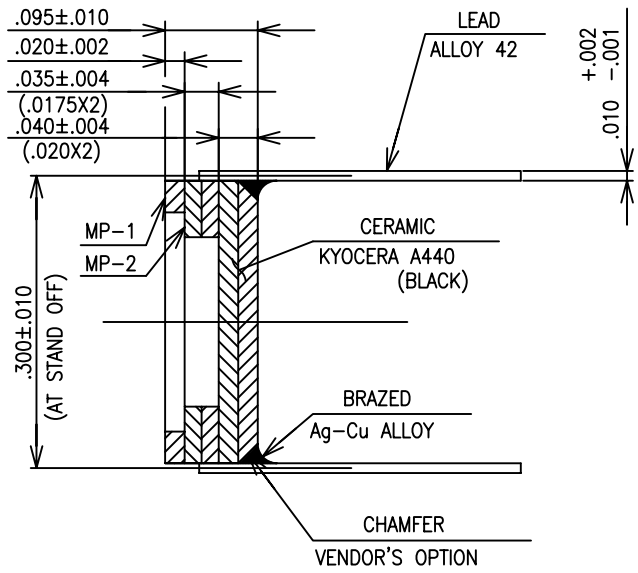

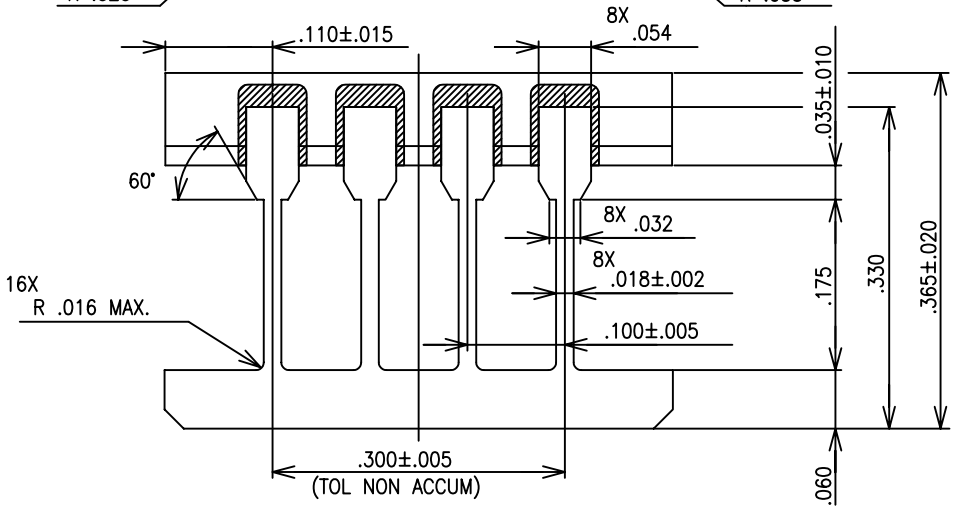

NOTES:

1. PLATING:
   Ni : 100~350 MICRO INCHES
   Au : 60 MICRO INCHES MIN.
2. SEAL AREA TO BE METALLIZED.
3. DIE ATTACH AREA NOT TO BE METALLIZED.
4. SEAL RING TO BE FLOATING FROM ANY PINS.
5. LEAD RESISTANCE: 0.20 OHM MAX.
6. WIRE BOND PAD CONNECTED TO CORRESPONDED OUTER LEAD.

MODIFICATION					
	CHANGED	DATE	DRAWN	CHECKED	APPROVED

NAME 8 LEAD SIDE BRAZED PACKAGE		TOLERANCE UNLESS OTHERWISE SPECIFIED	SB008ANG18-1		S=0 D=N
			DRAWN	CHECKED	APPROVED	DATE
			Y.A	H.B/S.NI	H.SA	OCT.12.'04
SCALE 8/1	MATERIAL AS INDICATED	±.005 THIRD ANGLE PROJECTION				
KYOCERA	KYOCERA CORPORATION KYOTO JAPAN		DRAWING NO. KD-SA4G18			SHEET 1/4
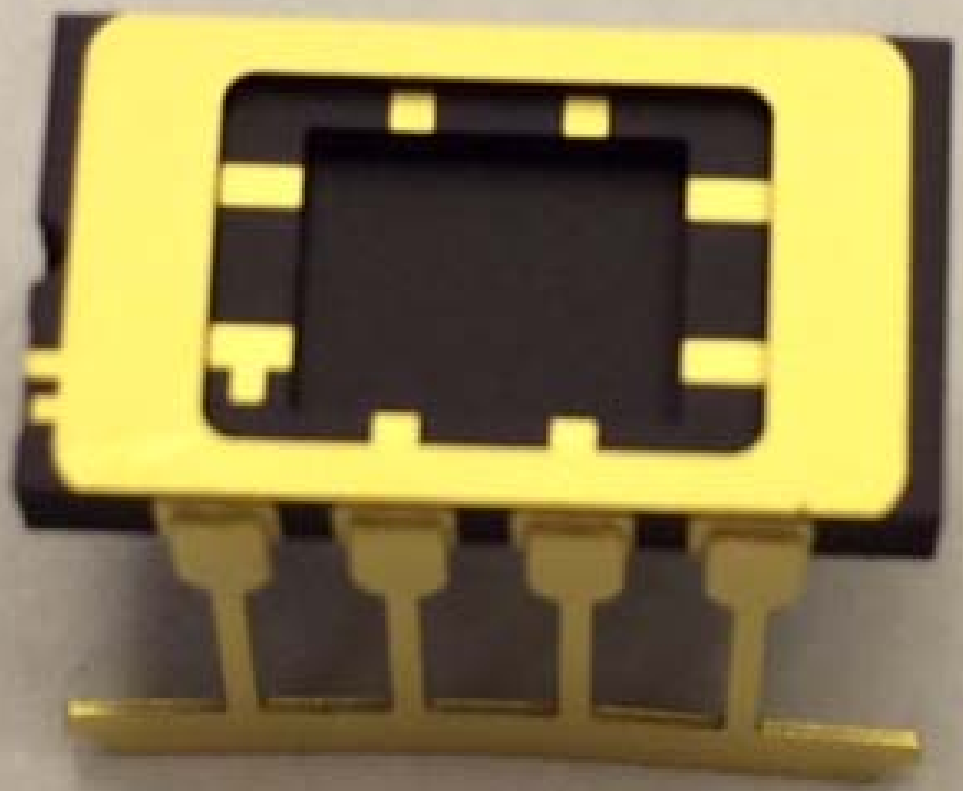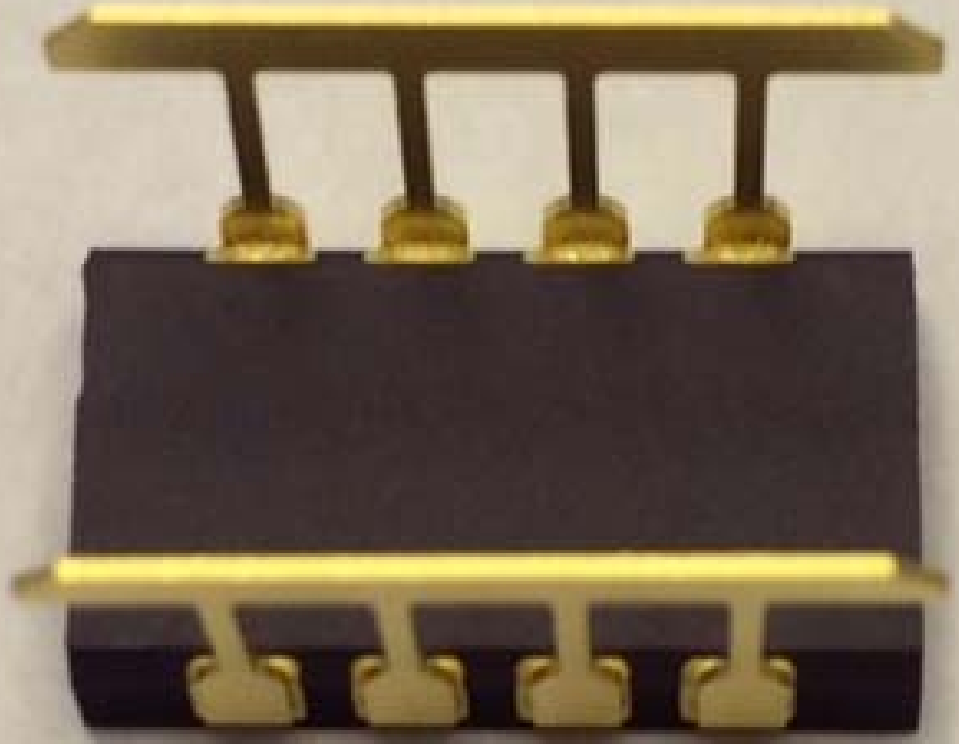
SPECTRUM SEMICONDUCTOR MATERIALS, INC.
www.spectrum-semi.com Phone: 408-435-5555 Fax: 408-435-8226